High Energy Corp
PO Box 308
Lower Valley Road
Parkesburg, PA 19365
Phone: 610-593-2800
Fax: 610-593-2985
Website: www.highenergycorp.com

CHN0 Series Metallized Film Capacitors

- Up to 650 V_{RMS} Working Voltage
- 250 kVA Max Power
- Up to 600 A_{RMS} Max Current
- Conduction Cooled
- Up to10 µF
- One Year Warranty

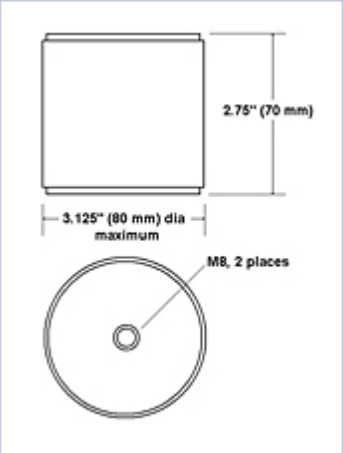

1

Part Number	CAP	V_{MAX} (RMS)	f_L	S_{MAX}	f_H	I_{MAX} (RMS)	f_{MAX}
CHN0140M250	1.4 µF	650 V	67 kHz	250 kV·A	73 kHz	400 A	70 kHz
CHN0220M250	2.2 µF	650 V	43 kHz	250 kV·A	46 kHz	400 A	70 kHz
CHN0300M250	3.0 µF	650 V	31 kHz	250 kV·A	53 kHz	500 A	70 kHz
CHN0620M250	6.2 µF	600 V	18 kHz	250 kV·A	37 kHz	600 A	70 kHz
CHN0850M250	8.5 µF	600 V	13 kHz	250 kV·A	27 kHz	600 A	70 kHz
CHN1000M250	10 µF	600 V	11 kHz	250 kV·A	23 kHz	600 A	70 kHz
CHN0 CUSTOM	N/A	N/A	N/A	N/A	N/A	N/A	N/A

1